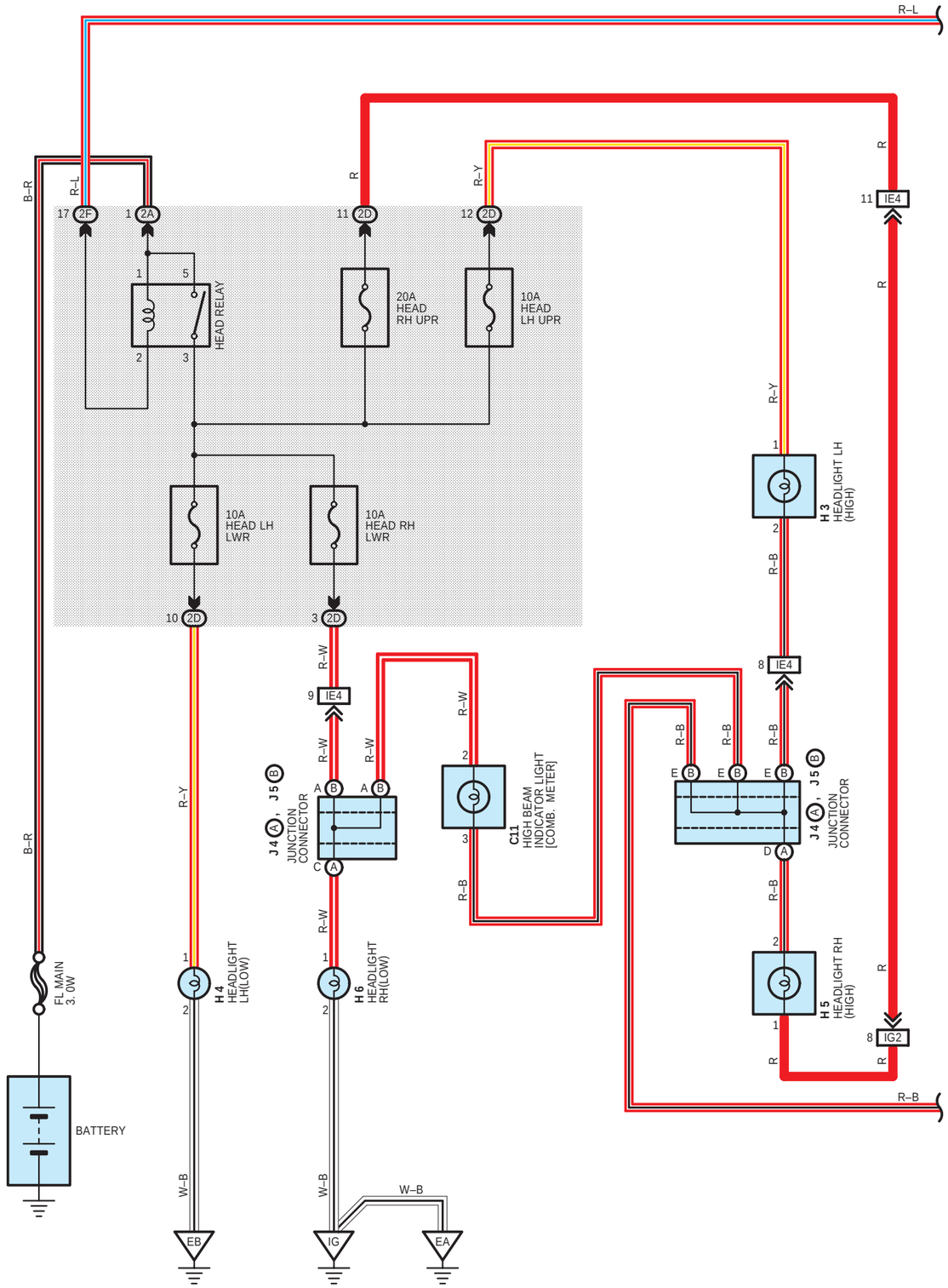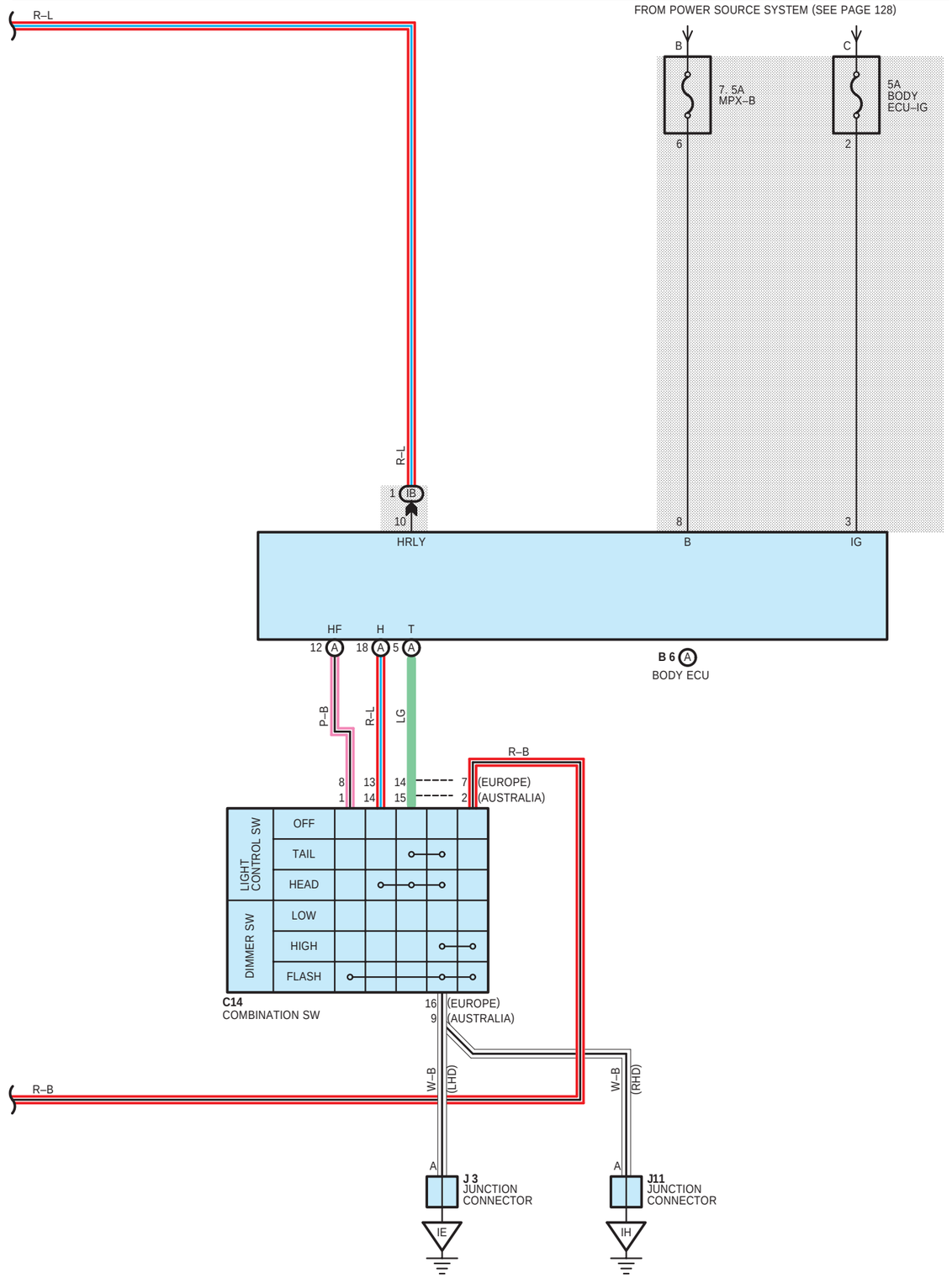HEADLIGHT (w/o DAYTIME RUNNING LIGHT)